UF300BNB Series

Size : ø398 x 98.3
Unit : mm

(Axial Fan)

Thermal Protection

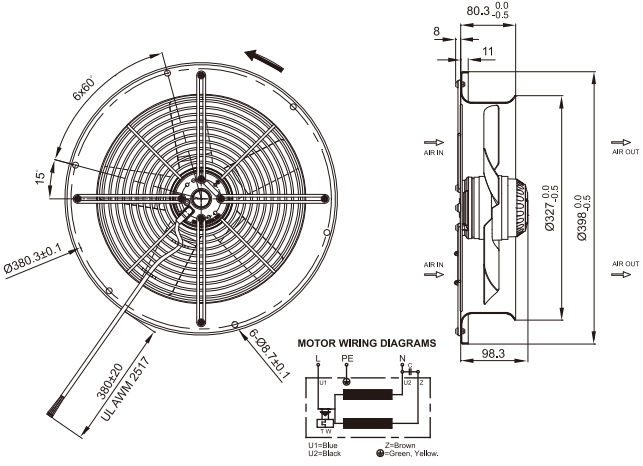

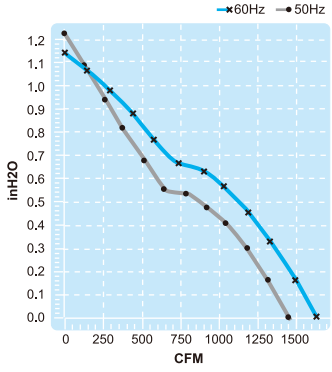

CE

Spec. / Model	Rated Voltage V	Frequency Hz	Input Power W	Rated Current A	Locked Current A	Speed RPM	Maximum Air Flow m^3/min.	Maximum Air Flow CFM	Maximum Pressure mmH_2O	Maximum Pressure $InchH_2O$	Capacitor μF/VDB	Noise dB	Weight kg
UF300BNB11H1C2A	115V	50	150	1.36	3.15	2650	40.6	1435	31	1.2	20/250	75	4.5
		60	200	1.76	3.10	2950	45.7	1615	29	1.1		78	
UF300BNB23H1C2A	230V	50	150	0.68	1.60	2650	40.6	1435	31	1.2	5/450	75	4.5
		60	200	0.88	1.56	2950	45.7	1615	29	1.1		78	